TS-E131CI/XAEW5 THF5674-B/CN

TS-E131CI

SEPARATE 2-WAY

- MAX. MUSIC POWER 180 W
- NOMINAL POWER 35 W
- WOOFER Ø130 mm
- TWEETER Ø23 mm SOFT DOME
- IMPEDANCE 4 OHMS
- SENSITIVITY 88 dB (±1.5 dB)
- FREQUENCY RESPONSE 37 Hz TO 44 kHz (−20 dB)
- GROSS WEIGHT 2.40 kg

Twaron The power of Aramid

Pioneer

4-Ø4.5 Rear Close

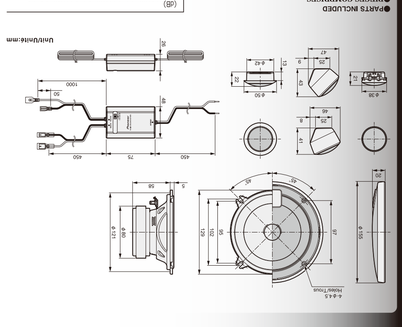

Unit/Units:mm